PIEDMONT PLUG™

SEAL THE MULLION. STOP THE SOUND.



*Visit **PiedmontPlug.com** for more information!*

Standard window with mullion exposed

Unwanted sound transfer!

Without the use of Piedmont Plugs, unwanted noise will travel between interior spaces.

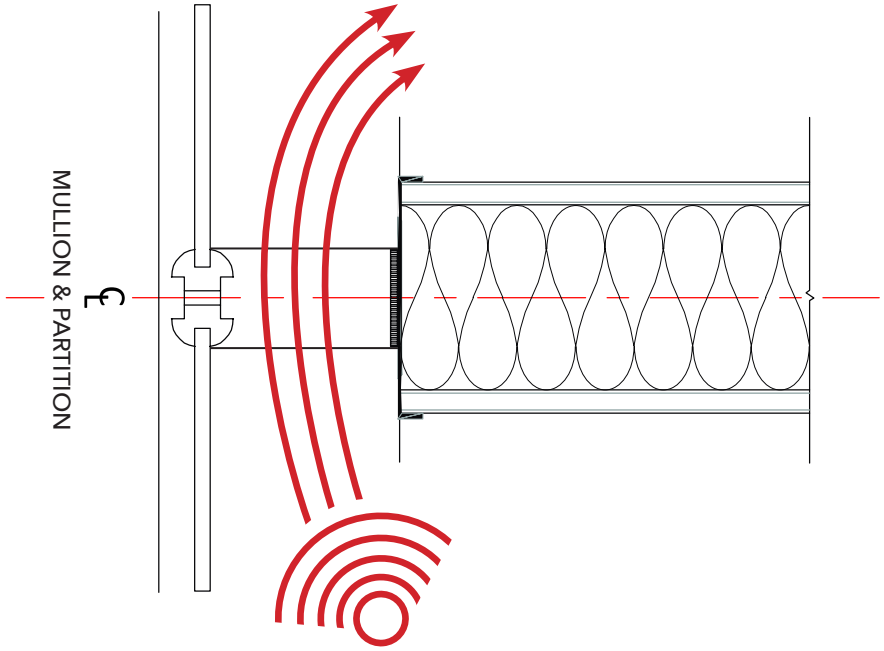

Window mullion with Piedmont Plugs

Stop sound!

With the use of Piedmont Plugs, unwanted noise is blocked from traveling between interior spaces.

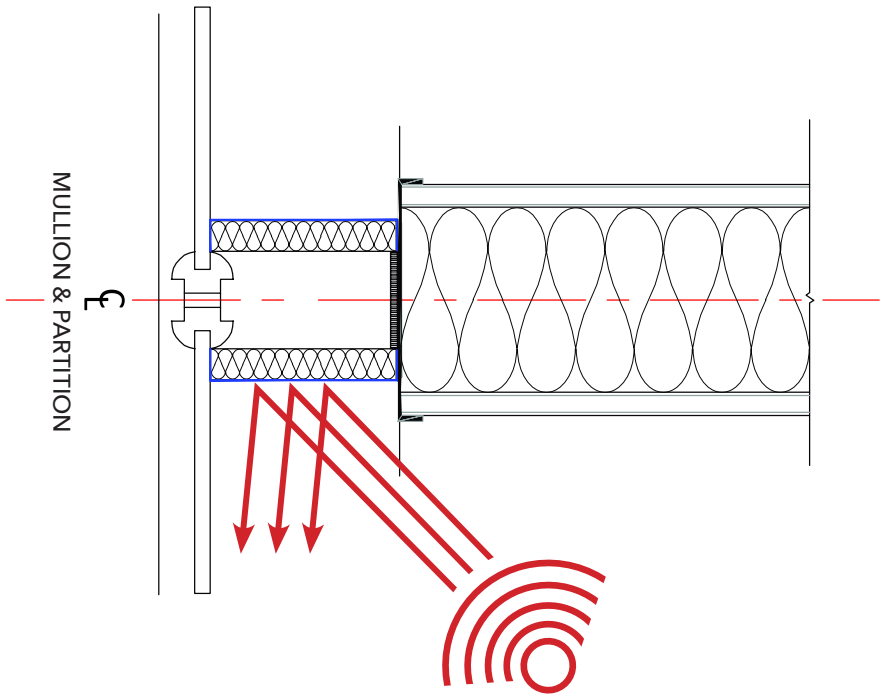

Ritz Acoustics | info@piedmontplug.com